RM43736

Units: mm

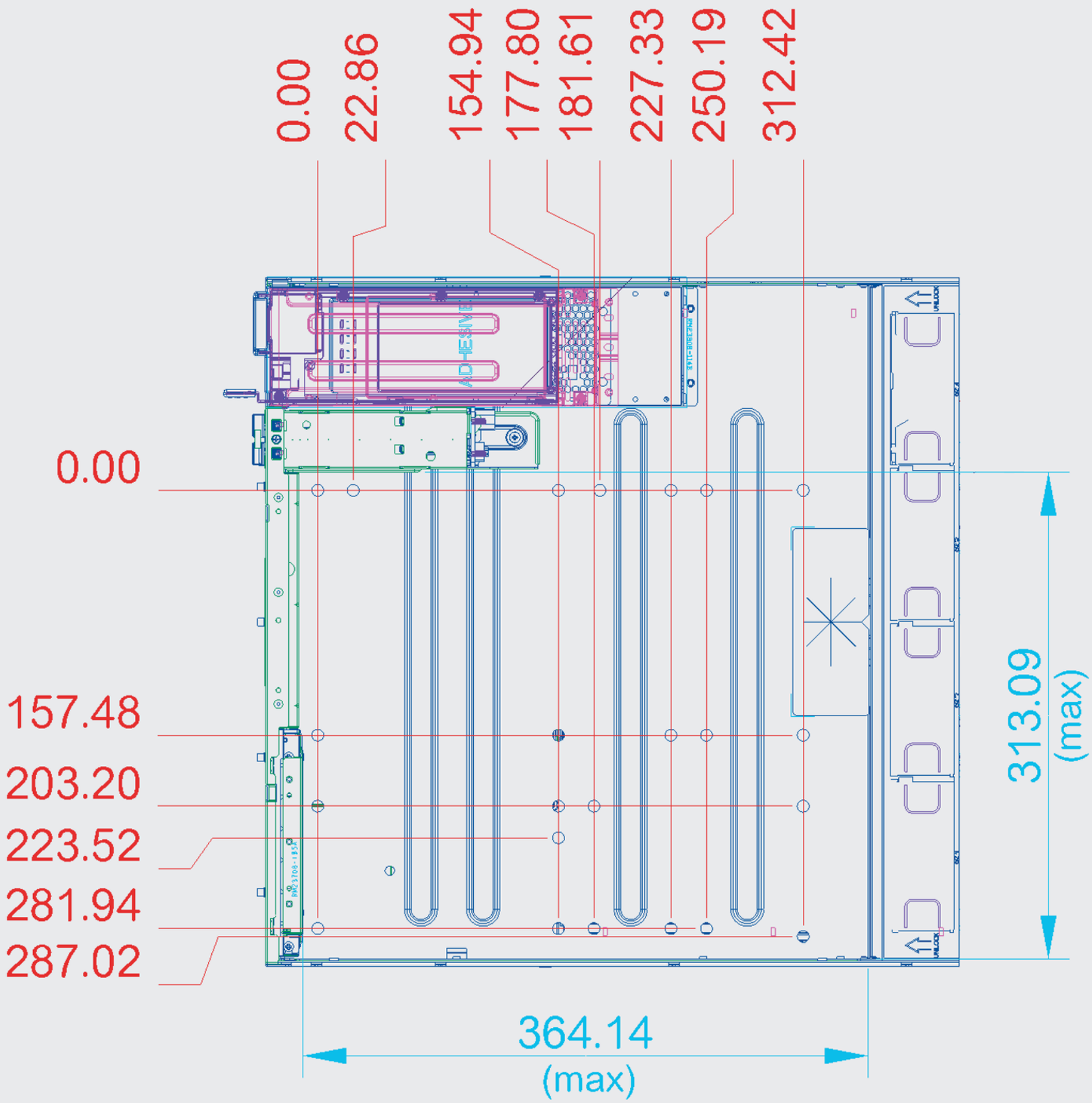

©2023 Chenbro Micom Co., Ltd. All rights reserved.

Configurations and specifications are subject to change without notice. All logos, product names, designs, and brands are trademarks of their respective owners. Chenbro makes all reasonable effort to ensure accurate information, but assumes no responsibility for typographical errors or omissions. Always consult with a Chenbro Account Manager for the latest pricing, specifications, and availability.